Mini Dry Contact Card
User Manual



4257-2991 A

I. Function description

Mini dry contact card is UPS options, which is used to provide UPS internal status to the outside or control peripheral device according to UPS status in the form of dry contact.

Card-insert dry contact adopts golden-finger interface, you can insert it into SNMP slot of the working UPS directly. The dry contact card monitors 6 UPS operating states: UPS inverter operation, AC power failure, low battery voltage, UPS alarm, bypass enable, and UPS fault. It also supports remote shutdown via the 2-pin CN4 with an external shutdown voltage signal.

The previous five operating states are controlled by 5 separate relays. Each relay has NO (Normally Open) and NC (Normally Closed) contacts, which can be wired to specific circuits as needed.

Pin 1 is the common source. NO terminals are disconnected from Pin 1 COM by default, while NC terminals are connected by default.

Example for AC power failure monitoring: (Terminal 1 [Common source] + Terminal 3 [AC failure NO terminal] connected to an external monitoring device):

◎ No AC failure: Terminal 3 stays normally open → monitoring device receives no "AC power failure" signal and remains in normal monitoring.

◎AC failure occurs: Terminal 3 switches from open to closed → monitoring device receives the signal, which may trigger alarms.

II. Introduction of dry contact interface

It mainly introduces dry contact terminal interface pins definition and function of card-insert dry contact.

1. Pins definition of connecting terminal on the board

Terminal No.	Terminal function	Terminal No.	Terminal function
1	Common source	9	Bypass enable NO
2	UPS on NC	10	Bypass enable NC
3	AC fail NO	11	UPS fail NO
4	AC fail NC	12	UPS fail NC
5	Batt low NO	CN4-1	Remote shutdown
6	Batt low NC	CN4-2	GND
7	UPS alarm NO		
8	UPS alarm NC		

For function definition of connecting terminal, you can also get relevant information from the silk-print on the rear of the card.

2. Application instruction of dry contact card

Peripheral monitoring device provides regular power to common terminal. Take the shown circuit for example, every signal terminal connects to relevant indicator and remote shutdown key, then it can achieve monitoring the UPS remotely.

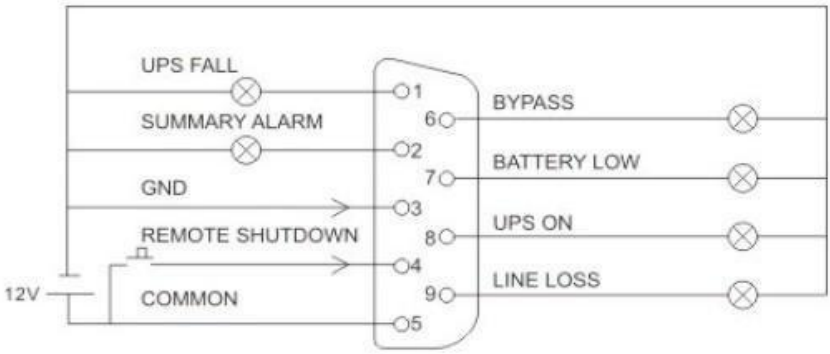

III. Product appearance

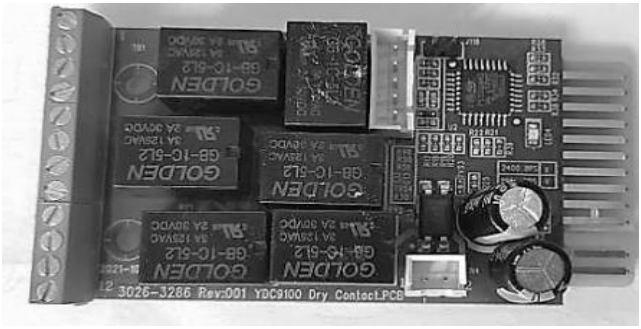

IV. Range of use

It applies to high frequency on-line UPS with SNMP slot.

V. Application field

1. IBM server, PC machine, work station and other device application.
2. Industry device automatic control and communication application.
3. Dry contact card only provides interface (dry contact), users make application software themselves.

VI. Installation

1. Open the cover plate of SNMP SLOT on the rear panel of UPS.



2. Insert dry contact card directly along the gap of SNMP SLOT.

3. Insert dry contact card until the metal plate of terminal interface clings closely to surface of UPS rear panel. It indicates the card insertion is OK. Then use the screw lock and fasten the dry contact card.



4. Connect with monitoring device by connecting wire of dry contact card. The monitoring device will display and control UPS operating status,to achieve remote monitoring of UPS operation.